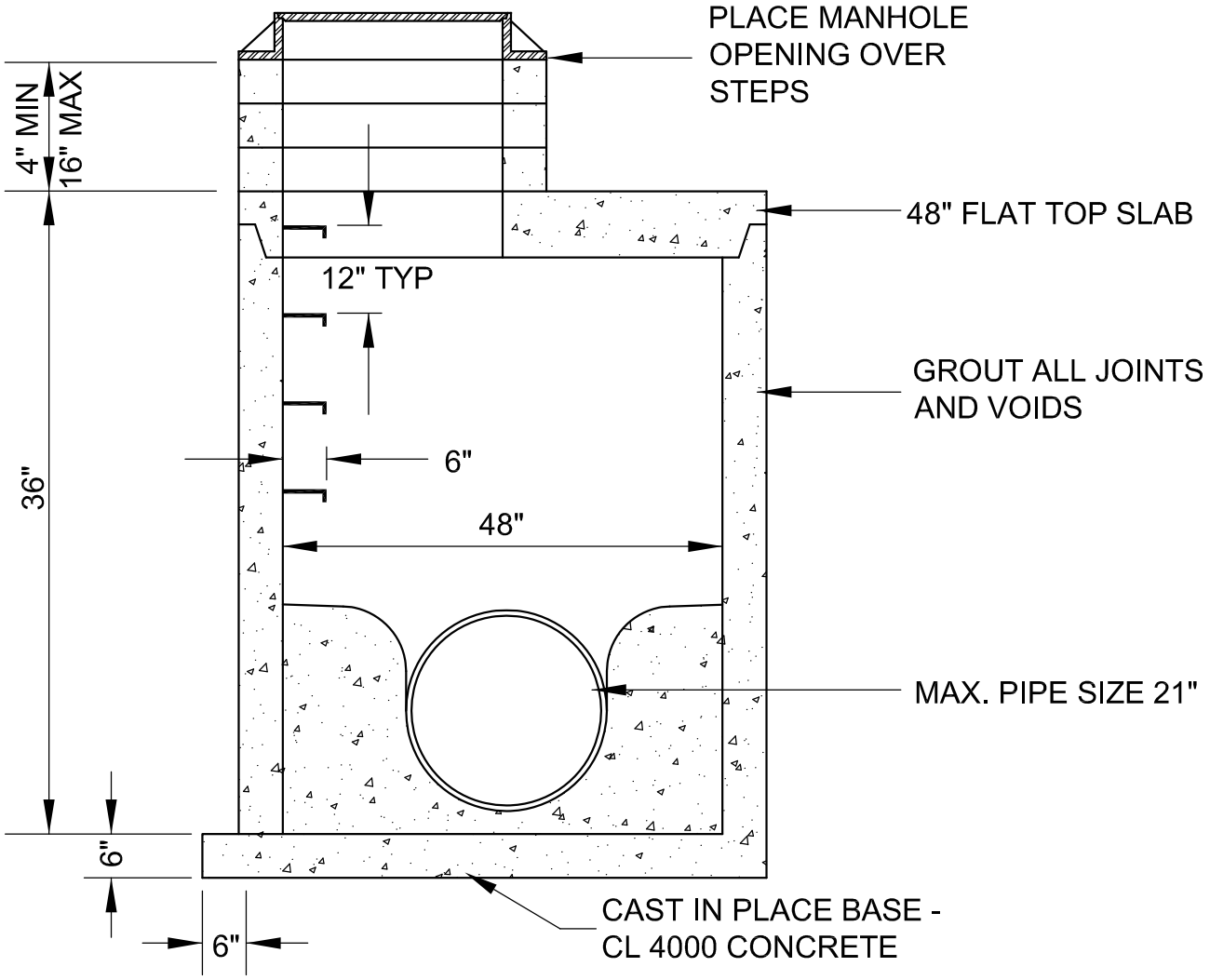

City Of Yakima
Engineering Division
129 North Second Street
Yakima, Washington

City of Yakima - Standard Detail

SEWER SHALLOW MANHOLE S2

NOT TO SCALE
Revision 05-2010