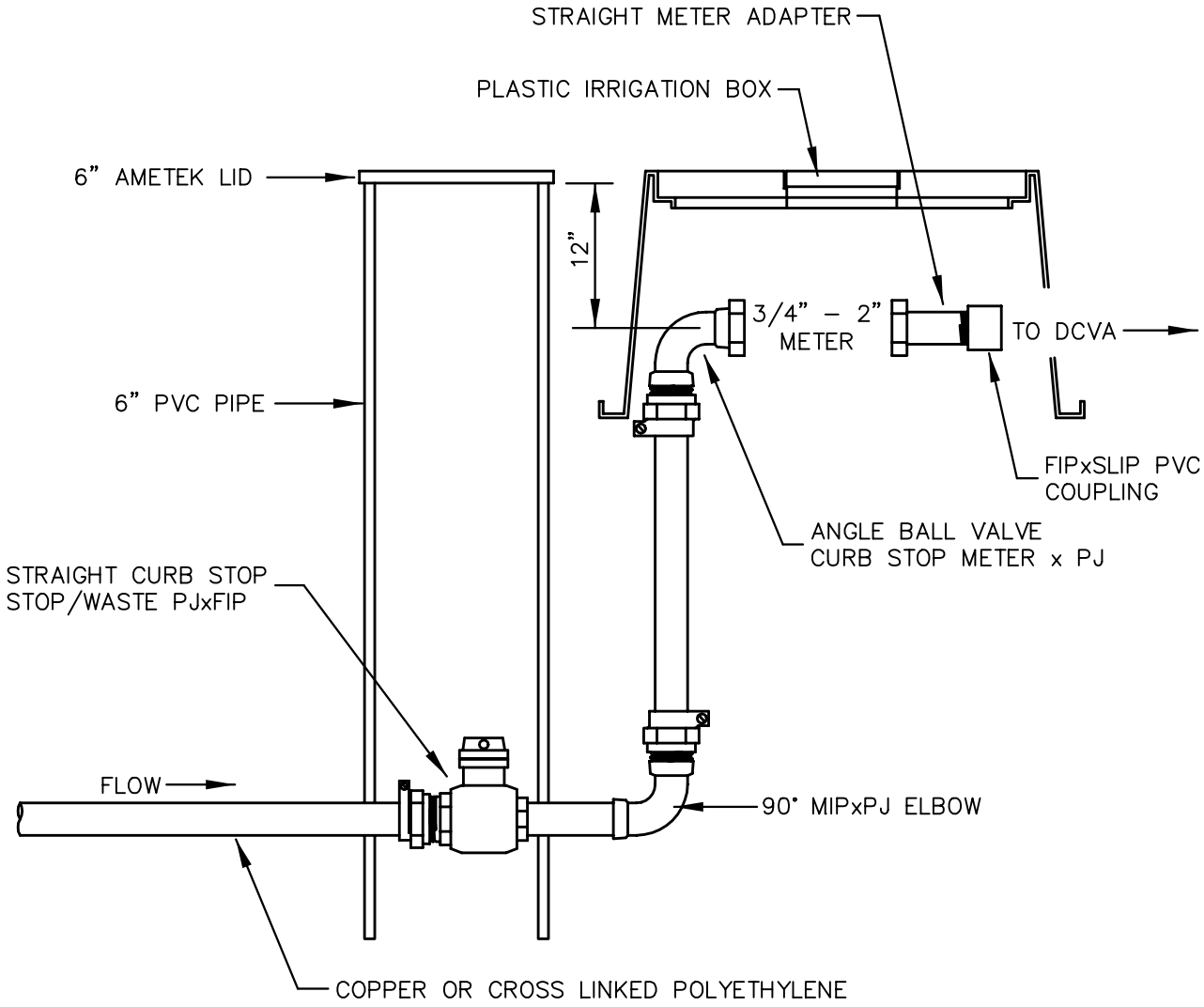


**NOTE**

1. ALL FITTINGS ARE TO BE BRASS.

W17 NTS

# 3/4" & 2" IRRIGATION METER SET

City of Yakima – Engineering Division

APPROVED: 7.9.99

| CITY OF YAKIMA - STANDARD DETAIL | 3/4" & 2" IRRIG. METER SET | W17 |
|---|---|---|