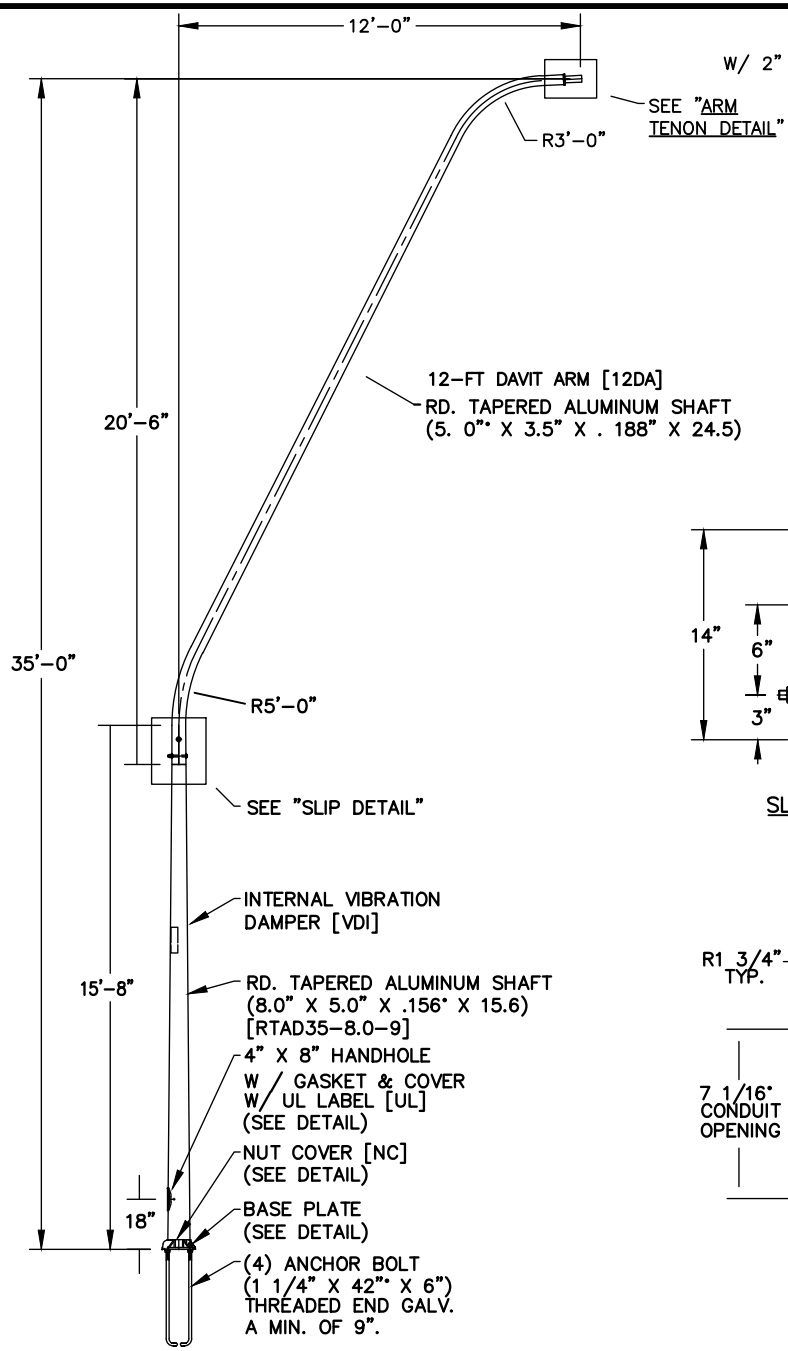

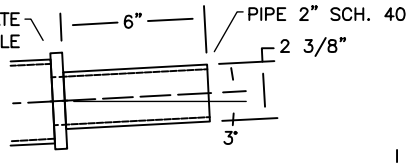

ARM TENON DETAIL

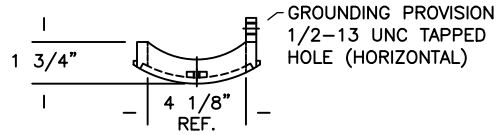

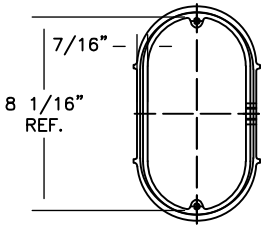

HANDHOLE DETAIL

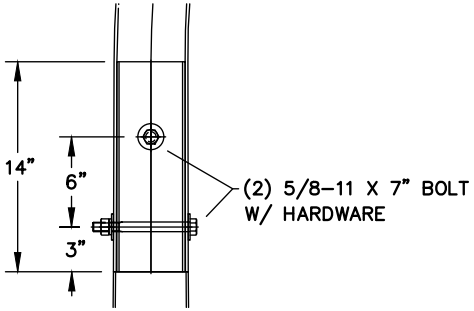

SLIP DETAIL

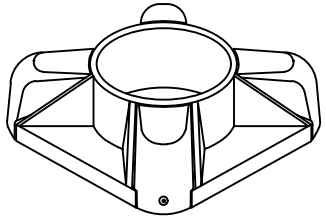

NUT COVER DETAIL

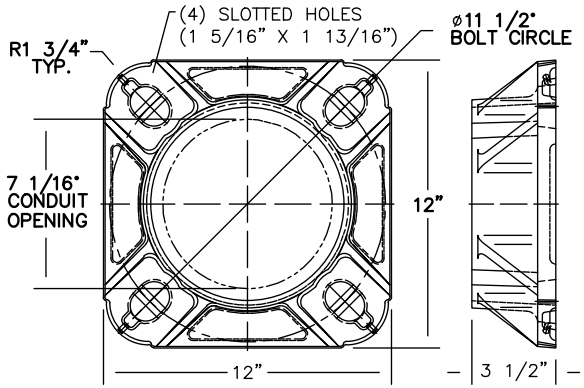

BASE PLATE DETAIL

MATERIAL SPECIFICATIONS:	
POLE SHAFT:	6063--T6 ALUMINUM ALLOY
BASE PLATE:	356--T6 ALUMINUM ALLOY
ANCHOR BOLT:	ASTM F1554, 55 K.S.I. MIN. YIELD
FINISH:	
FINISH TO BE BRUSHED ALUMINUM. [BA]	

City Of Yakima
Engineering Division
129 North Second Street
Yakima, Washington

City of Yakima - Standard Detail

ANGLED STREET LIGHT

NOT TO SCALE • Revision 08-2024

E1A